AP-8132 Access Point
INSTALLATION GUIDE

1.0 Introduction 5
1.1 Document Conventions 5
1.2 Warnings 6
1.3 Site Preparation 6
1.4 AP-8132 Package Contents 6
1.4.1 Features 7
2.0 Hardware Installation 7
2.1 Installation Instructions 8
2.2 Precautions 8
2.3 Access Point Placement 9
2.4 Power Injector System 9
2.5 Wall Mount Instructions 11
2.5.1 Wall Mount Procedure - New Installation. 12
2.5.1 Wall Mount Procedure - Existing Access Point Replacement. . . 13
2.6 Suspended Ceiling T-Bar Mount Installation 13
2.7 Suspended Ceiling Tile (Plenum) Installation. 15
2.8 AP-8132 Antenna Options 18
2.9 LED Indicators 20
3.0 Basic Access Point Configuration 22
4.0 Specifications 33
4.1 Electrical Characteristics 33
4.2 Physical Characteristics 33
4.3 Radio Characteristics 34
5.0 Regulatory Information 35
5.1 Wireless Device Country Approvals 35
5.1.1Country Selection 35
5.1.2 Frequency of Operation - FCC and IC 35
5.2 Health and Safety Precautions 36
5.2.1 Warnings for Use of Wireless Devices 36

5.2.2 Potentailly Hazardous Atmospheres - Fixed Installatons 36
5.2.3 Safety in Hospitals 36
5.3 RF Exposure Giudelines 37
5.3.1 Safety Information 37
5.4 International 37
5.5 EU 37
5.6 US and Canada 37
5.7 Power Suppply 37
5.8 Radio Frequency Interference Requirements - FCC 38
5.8.1 Radio Transmitters (Part 15) 38
5.9 Radio Frequency Interference Requirements - Canada 38
5.9.1 Radio Transmitters 38
5.10 CE Marking and European Economic Area 39
5.11 Statement of Compliance 39
5.12 Waste Electrical and Electronic Equipment (WEEE) 42
5.13 Turkish WEEE Statement of Compliance 43
6.0 Motorola Solutions Support Center 44
8.0 AP-8132 Access Point China ROHS Compliance 45

1 Introduction

The AP-8132 is a premium, *Enterprise class*, Access Point positioned at the top of Motorola Solutions' Access Point product line. The AP-8132 is a plenum rated, 3x3:3 802.11n Access Point utilizing two 802.11abgn radios.

An AP-8132 model Access Point uses WiNG 5 software as its onboard operating system. The Access Point's unique WiNG 5 software enables the Access Point to function as either a *Virtual Controller AP* capable of adopting and managing up to 24 additional AP-8132 Access Points, a *Standalone* Access Point or a *Dependent* mode Access Point managed by its connected controller.

If new to Motorola Solutions Access Point technology, refer to the *WiNG Access Point System Reference Guide* to familiarize yourself with Access Point technology and the feature set supported by the WiNG operating system. This guide is available at *http://supportcentral.motorolasolutions.com/support/product/manuals.do*.

This document is written for the qualified network device installer.

1.1 Document Conventions

The following graphical alerts are used in this document to indicate notable situations:

NOTE Tips, hints, or special requirements that you should take note of.

CAUTION Care is required. Disregarding a caution can result in data loss or equipment malfunction.

WARNING! Indicates a condition or procedure that could result in personal injury or equipment damage.

1.2 Warnings

- Read all installation instructions and site survey reports, and verify correct equipment installation before connecting the AP-8132 model Access Point.
- Remove jewelry and watches before installing this equipment.
- Verify any device connected to this unit is properly wired and grounded.
- Verify there is adequate ventilation around the device, and that ambient temperatures meet equipment operation specifications.

1.3 Site Preparation

- Consult your site survey and network analysis reports to determine specific equipment placement, power drops, and so on.
- Assign installation responsibility to the appropriate personnel.
- Identify and document where all installed components are located.
- Ensure adequate, dust-free ventilation to all installed equipment.
- Identify and prepare Ethernet and console port connections.
- Verify cable lengths are within the maximum allowable distances for optimal signal transmission.

1.4 AP-8132 Package Contents

An AP-8132 Access Point is available in external antenna models only. An AP-8132 ships with the following:

- AP-8132 access point
- AP-8132 Installation Guide *(This Guide)*
- Wall mount screw and anchor kit
- Accessories bag (LED light pipe for above the ceiling installations)

NOTE An AP-8132 Access Point can ship with a separately ordered protective cover (facade) containing a 6-element MIMO antenna (Part No. ML-2452-PTA6M6-1). When attached, LEDs continue to illuminate through the cover (similar to the illustration on the next page). A version of the facade is also available without the MIMO antenna. This cover (Part No. 21-8132FAC-01) functions strictly as a protective cover for the Access Point and provides no operational functionality.

1.4.1 Features

An AP-8132 access point minimally supports the following feature set:

- 3 RJ-45 connectors (GE1/POE, GE2 and Console)
- LED indicators
- Slots for wall mounting
- Lock port for Kensington® style security lock
- Two custom dual band radios
- Features for snap-on module support through the Access Point's USB interface
- 3x3 MIMO, 3 spatial streams

The AP-8132 access point has two RJ-45 connectors supporting 10/100/1000 Ethernet. GE1/POE accepts 802.3at or 802.3af compliant power from an external source

NOTE When operating in a Gigabit Ethernet environment, CAT-5e or CAT-6 cable is recommended for Gigabit operation.

2 Hardware Installation

2.1 Installation Instructions

An AP-8132 Access Point mounts either on a wall (with *M4 x 25* pan head screws and wall anchor - or equivalent) or on a suspended ceiling T-bar.

Once the AP-8132 is installed with facade and cabled, the cables (Ethernet and module connections) should not be visible when looking directly at the unit (ceiling and wall mounts).

To prepare for the installation:

1. Match the model number on the purchase order with the model numbers in the packing list and on the case of the Access Point.
2. Verify the contents of the box include the intended AP-8132 Access Point, and the included hardware matches the package contents (see *AP-8132 Package Contents on page 6*.

Part Number	***Description***
AP-8132-66040-US	802.11n 3x3:3 Access Point dual radio US version
AP-8132-66040-WR	802.11n 3x3:3 Access Point dual radio non-US (rest of world) version
AP-8132-66040-EU	802.11n 3x3:3 Access Point dual radio European version

3. Review site survey and network analysis reports to determine the location and mounting position for the AP-8132 Access Point.
4. Connect a CAT-5 or better Ethernet cable to a compatible 802.3at or 802.3af power source and run the cable to the installation site. Ensure there is sufficient slack on the cable to perform the installation steps.

NOTE When operating in a Gigabit Ethernet environment, CAT-5e or CAT-6 cable is recommended for Gigabit operation.

2.2 Precautions

Before installing an AP-8132 model Access Point, verify the following:

- Your using the correctly rated power solution for the AP-8132 (either the AP-PSBIAS-2P3-ATR power injector or the PWRS-14000-247R external power supply)
- Motorola Solutions recommends you do not to install the AP-8132 in wet or dusty areas.
- Verify the environment has a continuous temperature range between 0° C to 50° C.

2.3 Access Point Placement

For optimal performance, install the Access Point away from transformers, heavy-duty motors, fluorescent lights, microwave ovens, refrigerators and other industrial equipment. Signal loss can occur when metal, concrete, walls or floors block transmission. Install the Access Point in an open area or add Access Points as needed to improve coverage.

Antenna coverage is analogous to lighting. Users might find an area lit from far away to be not bright enough. An area lit sharply might minimize coverage and create *dark areas*. Uniform antenna placement in an area (like even placement of a light bulb) provides even, efficient coverage.

Place the Access Point using the following guidelines:

- Install the Access Point at an ideal height of 10 feet from the ground.
- Orient the Access Point antennas vertically for best reception (applies to external antenna models only).

To maximize the Access Point's radio coverage area, Motorola Solutions recommends conducting a site survey to define and document radio interference obstacles before installing the Access Point.

2.4 Power Injector System

An AP-8132 model Access Point can receive power via an Ethernet cable connected to the GE1/POE (LAN) port.

When users purchase a WLAN solution, they often need to place Access Points in obscure locations. In the past, a dedicated power source was required for each Access Point in addition to the Ethernet infrastructure. This often required an electrical contractor to install power drops at each Access Point location. The Power Injector merges power and Ethernet into one cable, reducing the burden of installation and allowing optimal Access Point placement in respect to the intended coverage area.

CAUTION Using a non-compliant injector, or an injector supporting legacy modes will not allow the AP-8132 to function at optimum performance levels.

CAUTION Do not plug in the AP-PSBIAS-2P3-ATR Power Injector into the Access Point's Console port. Connecting the Power Injector into the console port can damage the port and void the AP-8132's product warranty.

The AP-8132's supported Power Injector (Part No. AP-PSBIAS-2P3-ATR) is a high power POE Injector delivering up to 30 watts. The Access Point can only use a Power Injector when connecting the unit to the Access Point's GE1/POE port. The Power Injector is separately ordered and not shipped with an existing AP SKU.

The Motorola Access Point Power Supply (Part No. PWRS-14000-247R) is not included with the Access Point and is orderable separately as an accessory. If the Access Point is provided both POE power and PWRS-14000-247R power concurrently, the Access Point will source power from the PWRS-14000-247R supply only. Disconnecting AC power from the PWRS-14000-247R, causes the Access Point to re-boot before sourcing power from the POE power injector. If the AP is operating using injector supplied power, the AP will not automatically reboot if an AC adapter

is connected. The Access Point continues to operate with power supplied from the AC adapter without change to the Access Point operating configuration. If using AC adapter supplied power and a change to the AP's operating configuration is warranted, the Access Point needs to be manually rebooted by the customer.

⚠	***CAUTION*** The Access Point supports any standards-based compliant power source (including non-Motorola Solutions power sources). However, using the wrong solution (including a POE system used on a legacy Motorola Solutions Access Point) could either limit functionality or severely damage the Access Point and void the product warranty.

A separate Power Injector is required for each AP-8132 Access Point comprising the network.

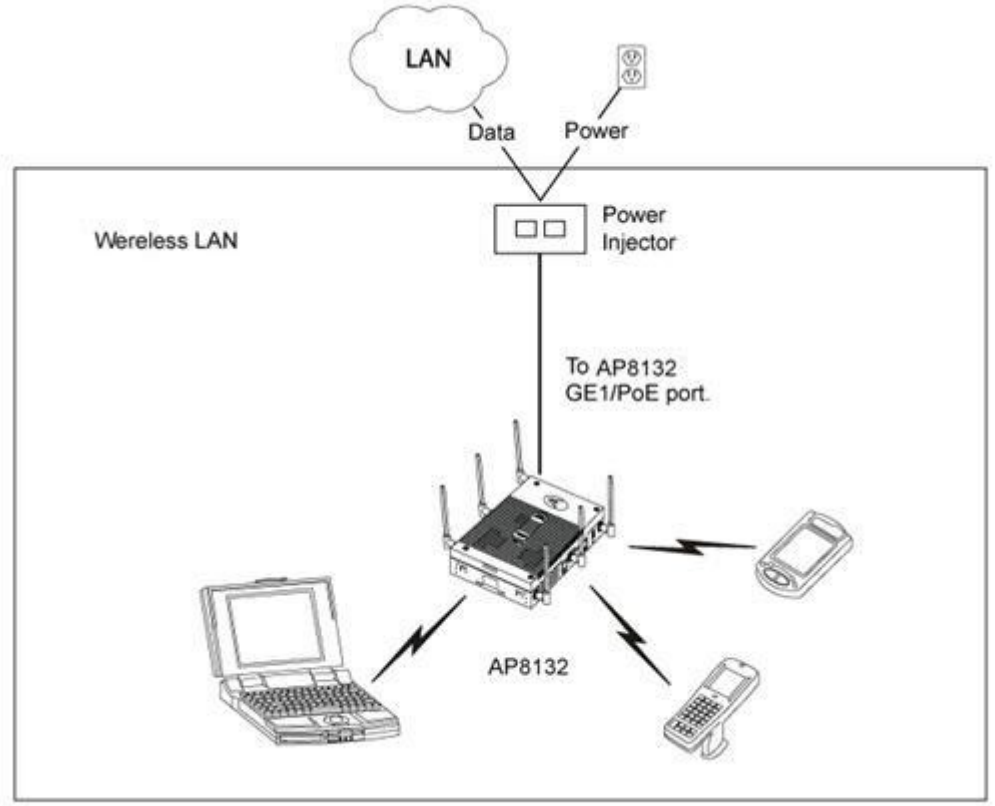

The Power Injector can be installed free standing, on an even horizontal surface or wall mounted using the power injector's wall mounting key holes. The following guidelines should be adhered to before cabling the Power Injector to an Ethernet source and an Access Point:

- Do not block or cover airflow to the Power Injector.
- Keep the Power Injector away from excessive heat, humidity, vibration and dust.

- The Power Injector isn't a repeater, and does not amplify the Ethernet signal. For optimal performance, ensure the Power Injector is placed as close as possible to the data port.

CAUTION To avoid problematic performance and restarts, disable POE from a wired switch port connected to an Access Point if mid-span *power sourcing equipment* (PSE) is used between the two, regardless of the manufacturer of the switch.

To install the Power Injector to an Ethernet data source and an Access Point:

CAUTION Ensure AC power is supplied to the Power Injector using an AC cable with an appropriate ground connection approved for the country of operation.

1. Connect the Power Injector to an AC outlet (110VAC to 220VAC).
2. Connect an RJ-45 Ethernet cable between the network data supply (host) and the Power Injector **Data In** connector.
3. Connect an RJ-45 Ethernet cable between the Power Injector **Data & Power Out** connector and the Access Point's GE1/POE port.

CAUTION Cabling a Power Injector to the WAN port (GE2 port) renders the AP non-operational. Only use a AP-PSBIAS-2P3-ATR Power Injector with the Access Point's GE1/POE (LAN) port.

Ensure the cable length from the Ethernet source (host) to the Power Injector and Access Point does not exceed 100 meters (333 ft).

The Power Injector has no On/Off power switch. The Injector receives power and is ready for device connection and operation as soon as AC power is applied. Refer to the *Installation Guide* shipped with the Power Injector for a description of the device's LEDs.

2.5 Wall Mount Instructions

A wall mount deployment requires hanging the AP-8132 access point along its width or length using two of three slots on the bottom of the unit. The AP-8132 can be mounted on to any plaster, wood or cement wall surface using the provided wall anchors.

The hardware required to install the AP-8132 on a wall consists of:

- Two wide-shoulder Phillips pan head self-tapping screws (M3.5 x 0.6 x 23 mm)
- Two wall anchors
- Security cable (optional)

Optional customer provided installation tools include:

- Security cable
- Philips head screw driver, or drill and drill bit

2.5.1 Wall Mount Procedure - New Installation

This section describes a new AP-8132 installation with no previous Access Point existing on the intended wall surface.

1. Place the Access Point against the wall, ensuring the Access Point's Motorola Solutions "bat wings" logo is in the correct orientation.
2. Mark the screw hole locations 152mm (6 in.) apart on the Access Point's long axis or 40mm (1.57 in.) apart on the Access Point's short axis, depending on the intended deployment orientation of the unit.
3. At each point, drill a hole in the wall and insert the anchor.

NOTE When pre-drilling a hole the recommended hole size is 4mm (0.16in.).

4. Place the Access Point on the anchor. Insert screws through into the anchor.
5. If required, install and attach a Kensington security cable (customer supplied) to the unit's lock port.
6. Cable the Access Point using either the Power Injector solution (AP-PSBIAS-2P3-ATR) or the approved AP-8132 power supply (PWRS-14000-247R).

   For Motorola Power Injector installations:

   a. Connect a RJ-45 CAT5e (or CAT6) Ethernet cable between the network data supply (host) and the Power Injector **Data In** connector.
   b. Connect a RJ-45 CAT5e (or CAT6) Ethernet cable between the Power Injector **Data & Power Out** connector and the Access Point's GE1/POE port.
   c. Ensure the cable length from the Ethernet source (host) to the Power Injector and Access Point does not exceed 100 meters (333 ft). The Power Injector has no On/Off power switch. The Power Injector receives power as soon as AC power is applied.

   For standard power adapter (non Power Injector) and line cord installations:

   a. Connect a RJ-45 Ethernet cable between the network data supply (host) and the Access Point's GE1/POE or GE2 port.
   b. Verify the power adapter is correctly rated according to the country of operation.
   c. Connect the power supply line cord to the power adapter.
   d. Attach the power adapter cable into the power connector on the Access Point.
   e. Attach the power supply line cord to a power supply.

7. Attach supported 2.4 GHz or 5 GHz antennas to the connectors. For more information on supported AP-8132 antennas, see *AP-8132 Antenna Options on page 18.*
8. Verify the Access Point is receiving power by observing the LEDs are lit or flashing. For more information on AP-8132 LED behavior, see *LED Indicators on page 20*.
9. The Access Point is ready to configure.

CAUTION If not using an AP-PSBIAS-2P3-ATR model power injector, ensure only the AP-8132's designated power supply (PWRS-14000-247R) is used to supply power to the Access Point. Using an incorrectly rated power supply could damage the Access Point and void the product warranty. Do not actually connect to the power source until the cabling portion of the installation is complete.

2.5.2 Wall Mount Procedure - Existing Access Point Replacement

An existing AP-7131 or AP-7131N Series Access Point, installed on a wall (plenum installation), can be replaced by an AP-8132. Simply remove the existing AP-7131 or AP-7131N from its mounting screws, leave the mounting hardware in place and install the new AP-8132 directly on to the existing mounting hardware. The cabling procedure for such a replacement is as described in the previous section.

2.6 Suspended Ceiling T-Bar Mount Instructions

Ceiling mount requires holding the AP-8132 up against a T-bar of a suspended ceiling grid and twisting the unit on to the T-bar. If deploying the AP-8132 on a sculpted ceiling T-Bar, the Access Point mounting kit (Part No. KT-135628-01) can optionally be used as well.

1. If required, install and attach a Kensington security cable (customer provided) to the unit's lock port.
2. Using only the mounting bracket from the mounting kit, rotate and click the mounting bracket into the mounting slots on the AP-8132.
3. Attach the antennas to their correct connectors. For more information on supported AP-8132 antennas, see *AP-8132 Antenna Options on page 18*.
4. Cable the Access Point using either the Power Injector solution (AP-PSBIAS-2P3-ATR) or the approved AP-8132 power supply (PWRS-14000-247R).

   For Motorola Power Injector installations:

   a. Connect a RJ-45 CAT5e (or CAT6) Ethernet cable between the network data supply (host) and the Power Injector **Data In** connector.

   b. Connect a RJ-45 CAT5e (or CAT6) Ethernet cable between the Power Injector **Data & Power Out** connector and the Access Point's GE1/POE port.

   c. Ensure the cable length from the Ethernet source (host) to the Power Injector and Access Point does not exceed 100 meters (333 ft). The Power Injector has no On/Off power switch. The Power Injector receives power as soon as AC power is applied.

For standard power adapter (non Power Injector) and line cord installations:

a. Connect a RJ-45 Ethernet cable between the network data supply (host) and the Access Point's GE1/POE or GE2 port.

b. Verify the power adapter is correctly rated according the country of operation.

c. Connect the power supply line cord to the power adapter.

d. Attach the power adapter cable into the power connector on the Access Point.

e. Attach the power supply line cord to a power supply.

CAUTION If not using an AP-PSBIAS-2P3-ATR model power injector, ensure only the AP-8132's designated power supply (PWRS-14000-247R) is used to supply power to the Access Point. Using an incorrectly rated power supply could damage the Access Point and void the product warranty. Do not actually connect to the power source until the cabling portion of the installation is complete.

5. Verify the unit has power by observing the LEDs. For more information on AP-8132 LED behavior, see *LED Indicators on page 20*.
6. Align the bottom of the ceiling T-bar with the back of the Access Point.
7. Orient the Access Point chassis by its length and the length of the ceiling T-bar.
8. Rotate the Access Point chassis 45 degrees clockwise.
9. Push the back of the Access Point chassis on to the bottom of the ceiling T-bar.
10. Rotate the Access Point chassis 45 degrees counter-clockwise. The clips click as they fasten to the T-bar.

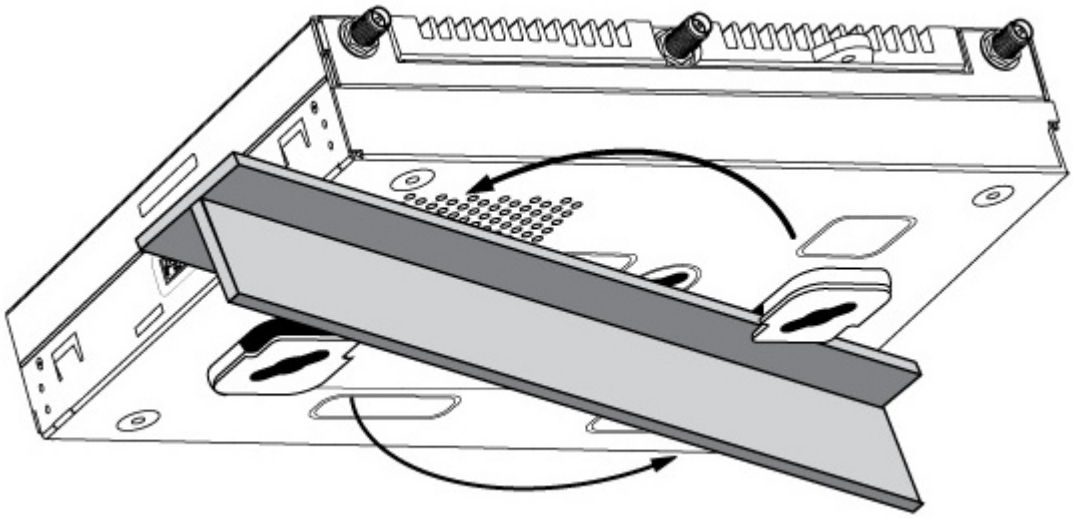

11. The Access Point is ready to configure.

2.7 Suspended Ceiling Tile (Plenum) Mount Instructions

An above the ceiling installation requires placing the Access Point above a suspended ceiling and installing the provided light pipe under the ceiling tile for viewing the rear panel status LEDs of the unit. An above the ceiling installation enables installations compliant with drop ceilings, suspended ceilings and industry standard tiles from .625 to .75 inches thick.

The mounting hardware required to install the Access Point above a ceiling consists of:

- Light pipe
- Badge for light pipe
- Safety wire (strongly recommended)
- Security cable (optional)

NOTE Notes or warnings about suspended ceiling mounts apply to all installations where the unit is placed on suspended ceiling tile.

CAUTION Motorola does not recommend mounting the Access Point directly to any suspended ceiling tile with a thickness less than 12.7mm (0.5in.) or a suspended ceiling tile with an unsupported span greater than 660mm (26in.). Motorola strongly recommends fitting the Access Point with a safety wire suitable for supporting the weight of the device. The safety wire should be a standard ceiling suspension cable or equivalent steel wire between 1.59mm (.062in.) and 2.5mm (.10in.) in diameter.

To install the Access Point above a ceiling:

NOTE Remove the Access Point's facade and antennas before installing in an above the ceiling orientation. The Access Point is not certified for an above the ceiling installation with its accessories installed.

1. If possible, remove the ceiling tile from its frame and place it, finish side down, on a work surface.
2. If required, install a safety wire, between 1.5mm (.06in.) and 2.5mm (.10in.) in diameter, in the ceiling space.
3. If required, install and attach a security cable to the Access Point's lock port.
4. Mark a point on the finished side of the tile where the light pipe is to be located.
5. Create a light pipe path hole in the target position on the ceiling tile.

6. Use a drill to make a hole in the tile the approximate size of the Access Point LED light pipe.

CAUTION Motorola recommends care be taken not to damage the finished surface of the ceiling tile when creating the light pipe hole and installing the light pipe.

7. Remove the light pipe's two rubber stoppers (from the Access Point) before installing the light pipe.
8. Connect the light pipe to the bottom of the Access Point. The dual channel light pipe is mated to the Access Point by firmly pressing the light pipe into the two round openings that contained the two rubber plugs removed in the previous step.

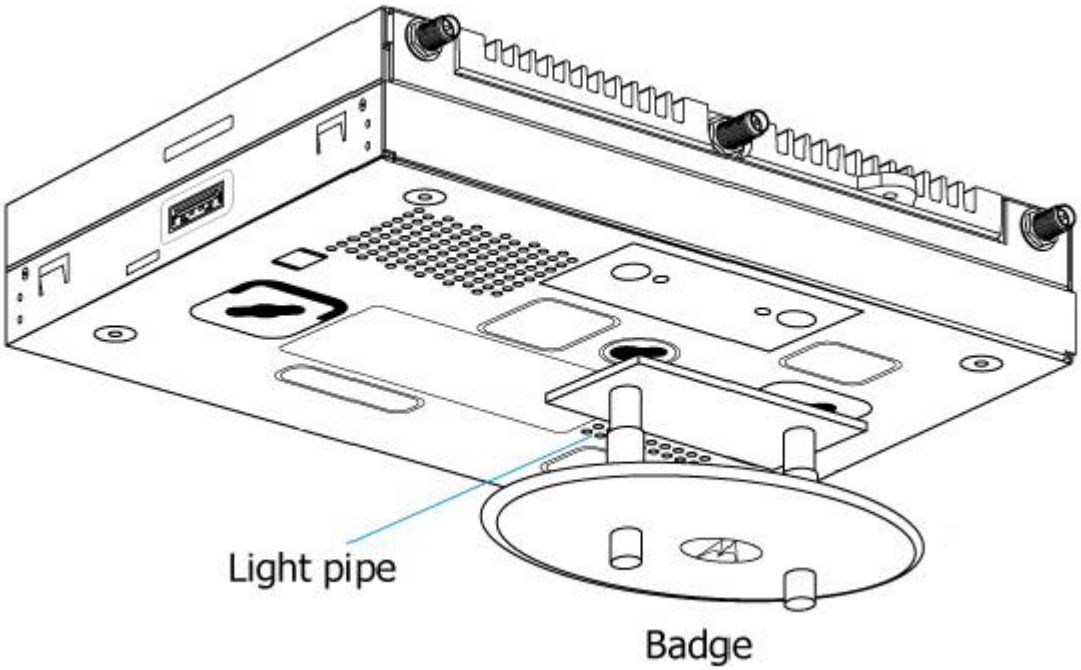

9. Fit the light pipe into hole in the tile from its unfinished side.
10. Slide the badge onto the light pipe from the finished side of the ceiling tile.
11. Attach the antennas to their correct connectors. For more information on supported AP-8132 antennas, see *AP-8132 Antenna Options on page 18*.

NOTE Motorola recommends attaching safety wire to the Access Point safety wire tie point or security cable (if used) to the Access Point's lock port.

12. Align the ceiling tile into its former ceiling space.

13. Cable the Access Point using either the Power Injector solution (AP-PSBIAS-2P3-ATR) or the approved AP-8132 power supply (PWRS-14000-247R).

    For Motorola Power Injector installations:

    a. Connect a RJ-45 CAT5e (or CAT6) Ethernet cable between the network data supply (host) and the Power Injector **Data In** connector.

    b. Connect a RJ-45 CAT5e (or CAT6) Ethernet cable between the Power Injector **Data & Power Out** connector and the Access Point's GE1/POE port.

    c. Ensure the cable length from the Ethernet source (host) to the Power Injector and Access Point does not exceed 100 meters (333 ft). The Power Injector has no On/Off power switch. The Power Injector receives power as soon as AC power is applied.

    For standard power adapter (non Power Injector) and line cord installations:

    a. Connect a RJ-45 Ethernet cable between the network data supply (host) and the Access Point's GE1/POE or GE2 port.

    b. Verify the power adapter is correctly rated according the country of operation.

    c. Connect the power supply line cord to the power adapter.

    d. Attach the power adapter cable into the power connector on the Access Point.

    e. Attach the power supply line cord to a power supply.

CAUTION If not using an AP-PSBIAS-2P3-ATR model power injector, ensure only the AP-8132's designated power supply (PWRS-14000-247R) is used to supply power to the Access Point. Using an incorrectly rated power supply could damage the Access Point and void the product warranty. Do not actually connect to the power source until the cabling portion of the installation is complete.

14. Verify the behavior of the Access Point LED light pipe. For more information on AP-8132 LED behavior, see *LED Indicators on page 20.*

15. Place the ceiling tile back in its frame and verify it is secure.

16. The Access Point is ready to configure.

2.8 AP-8132 Antenna Options

Motorola Solutions supports two antenna suites for an AP-8132. One antenna suite supporting the 2.4 GHz band and another antenna suite supporting the 5 GHz band. Select an antenna model best suited to the intended operational environment of the AP-8132 Access Point.

NOTE In compliance with respective local regulatory law, Motorola Solutions AP software provides professional installers the option to configure the antenna type and antenna gain for approved antennas.

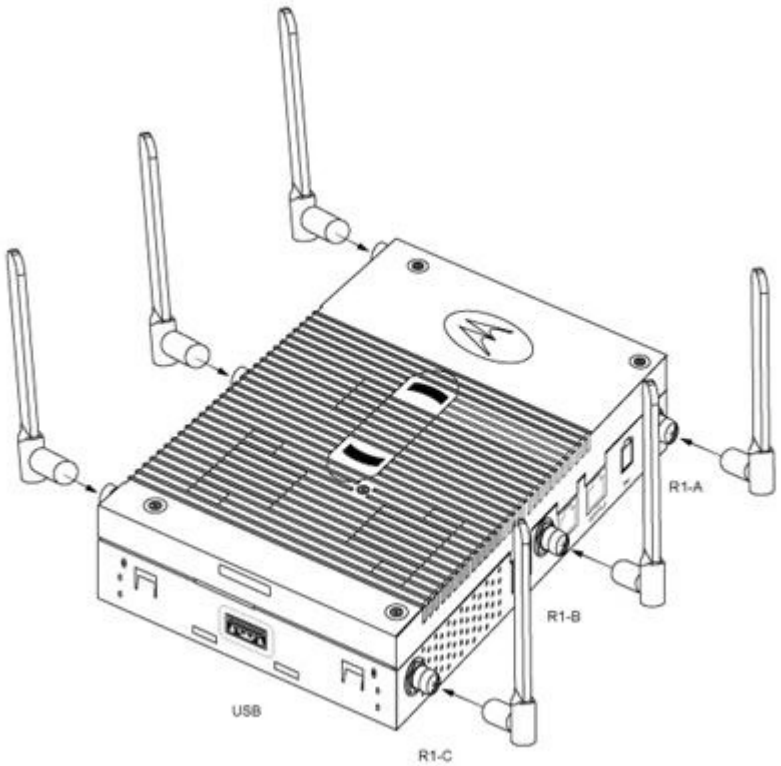

The AP-8132's supported 2.4 GHz antenna suite includes the following models:

Part Number	***Antenna Type***
ML-2499-5PNL-72-N	Panel Antenna
ML-2499-APA2-01	Dipole Antenna
ML-2499-BPNA3-01R	Panel Antenna
ML-2499-BYGA2-01R	Yagi Antenna

Part Number	***Antenna Type***
ML-2499-FHPA9-01R	Dipole Antenna
ML-2499-HPA3-01R	Dipole Antenna
ML-2499-SD3-01R	Patch Antenna
ML-2452-APA2-01	Dipole Antenna
ML-2452-PNA5-01R	Panel Antenna
ML-2452-PNA7-01R	Panel Antenna
ML-2452-HPA5-036	Dipole Antenna
ML-2452-APAG2A1-01	Dipole Antenna

The AP-8132's supported 5 GHz antenna suite includes the following models:

Part Number	***Antenna Type***
ML-5299-APA1-01R	Dipole Antenna
ML-5299-FHPA10-01R	Dipole Antenna
ML-5299-HPA1-01R	Dipole Antenna
ML-5299-PTA1-01R	Patch Antenna
ML-5299-WPNA1-01R	Panel Antenna
ML-5299-BYGA15-012	Yagi Antenna
ML-2452-APA2-01	Dipole Antenna
ML-2452-PNA5-01R	Panel Antenna
ML-2452-PNA7-01R	Panel Antenna
ML-2452-HPA5-036	Dipole Antenna
ML-2452-APAG2A1-01	Dipole Antenna

NOTE ML-2499-BPNA3-01R and ML-2499-BYGA2-01R are not approved in EU countries.

The Access Point also supports a plastic facade (cover), separately ordered, that either contains an antenna (Part No. ML-2452-PTA6M6-1) or serves as a plastic cover without an antenna (Part No. 21-8132FAC-01)

For up-to-date information on supported antennas and antenna specifications, please refer to the *Motorola Solutions Enterprise Wireless LAN Antenna Specification Guide* available at http://supportcentral.motorolasolutions.com/support/product/manuals.do.

2.9 LED Indicators

Both Integrated Antenna and External Antenna models have LED activity indicators on the front of the case. With the External Antenna models mounted above a ceiling, LEDs are at the center of an oval badge on the ceiling.

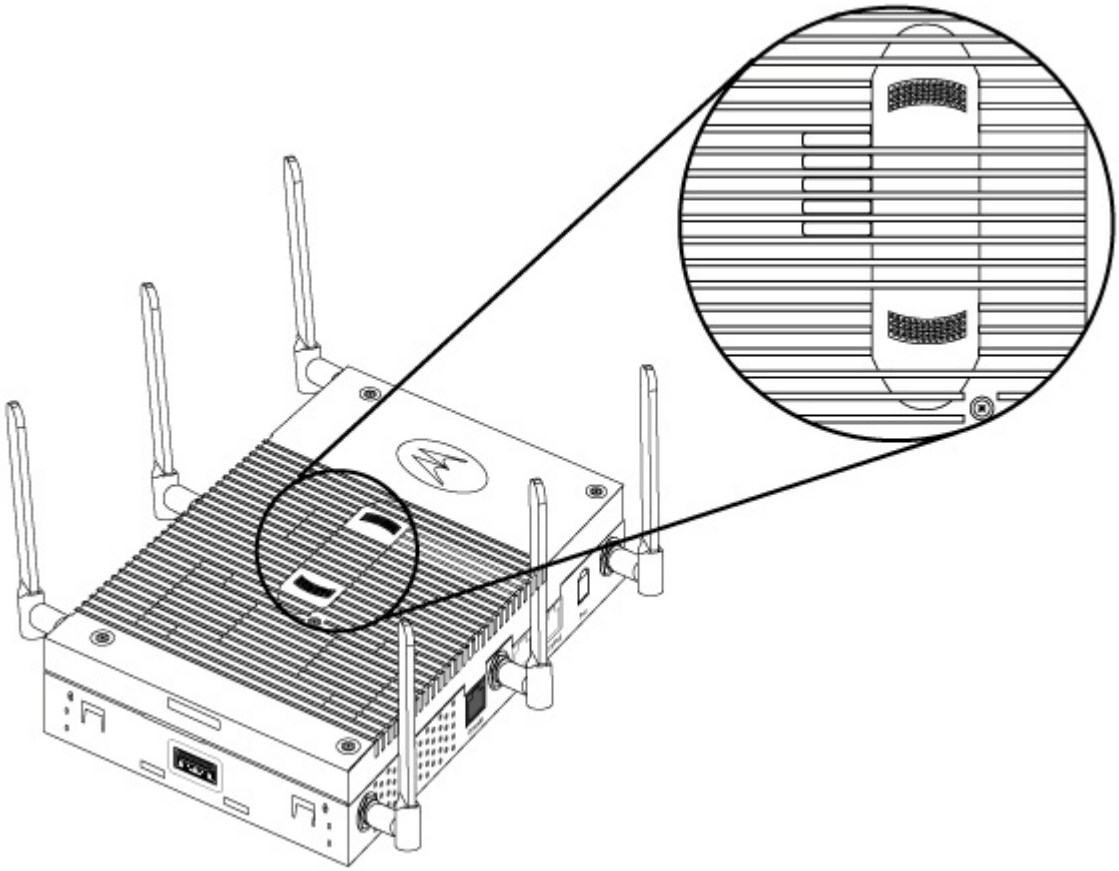

The LEDs provide a status display indicating error conditions, transmission, and network activity for the 5 GHz 802.11an (amber) radio and the 2.4 GHz 802.11bgn (green) radio.

Task	***5 GHz Activity LED* (Amber)**	***2.4 GHz Activity LED* (Green)**
Unconfigured Radio	On	On
Normal Operation	• If this radio band is enabled: Blink at 5 second interval • If this radio band is disabled: Off • If there is activity on this band: Blink interval at 1 time per second	• If this radio band is enabled: Blink at 5 second interval • If this radio band is disabled: Off • If there is activity on this band: Blink interval at 1 time per second

Task	***5 GHz Activity LED* (Amber)**	***2.4 GHz Activity LED* (Green)**
Firmware Update	On	Off
Locate AP Mode	LEDs blink in an alternating green, red and amber pattern using an irregular blink rate. This LED state in no way resembles normal operating conditions.	LEDs blink in an alternating green, red and amber pattern using an irregular blink rate. This LED state in no way resembles normal operating conditions

The LEDs on the bottom of the Access Point are optionally viewed using a single (customer installed) extended light pipe, adjusted as required to suit above the ceiling installations. The light pipe uses a dual LED to display the same functionality as the LEDs on the top of the Access Point.

3 Basic Access Point Configuration

Once the Access Point is installed and powered on, complete the following steps to get the Access Point up and running and access management functions:

1. The Access Point's IP address is optimally provided using DHCP. A zero config IP address can also be derived if DHCP resources are unavailable. Using zero config, the last two octets in the IP address are the decimal equivalent of the last two bytes in the Access Point's hardcoded MAC address.

   For example:

   MAC address - 00:C0:23:00:F0:0A
   Zero-config IP address - 169.254.240.10

   To derive the Access Point's IP address using its MAC address:

   a. Open the Windows calculator by selecting *Start > All Programs > Accessories > Calculator*. This menu path may vary slightly depending on your version of Windows.
   b. With the Calculator displayed, select *View > Scientific*. Select the **Hex** radio button.
   c. Enter a hex byte of the Access Point's MAC address. For example, F0.
   d. Select the **Dec** radio button. The calculator converts F0 into 240. Repeat this process for the last Access Point MAC address octet.
2. Point the Web browser to the Access Point's IP address. The following login screen displays:

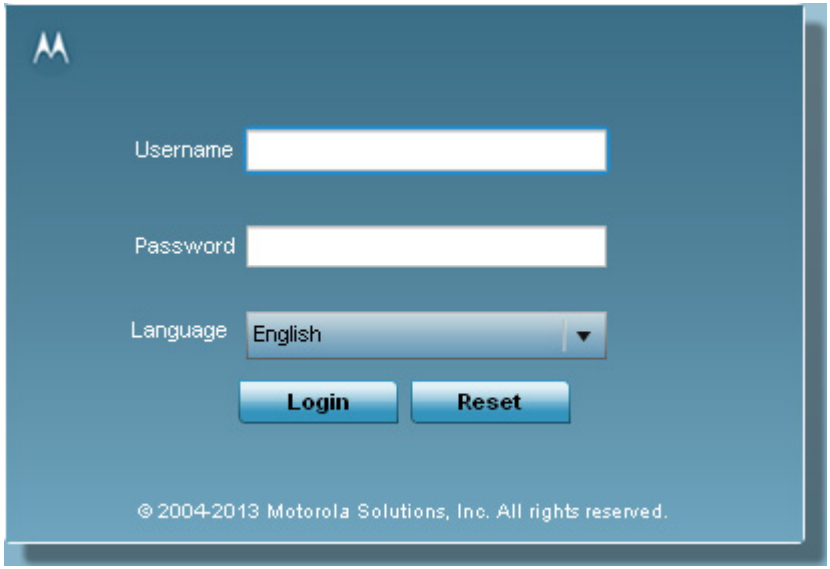

3. Enter the default username *admin* in the **Username** field.
4. Enter the default password *motorola* in the **Password** field.
5. Click the **Login** button to load the management interface.

NOTE When logging in for the first time, you're prompted to change the password to enhance device security in subsequent logins.

NOTE If you get disconnected when running the wizard, you can connect again with the Access Point's actual IP address (once obtained) and resume the wizard.

6. If this is the first time the management interface has been accessed, the Initial Setup Wizard automatically displays.

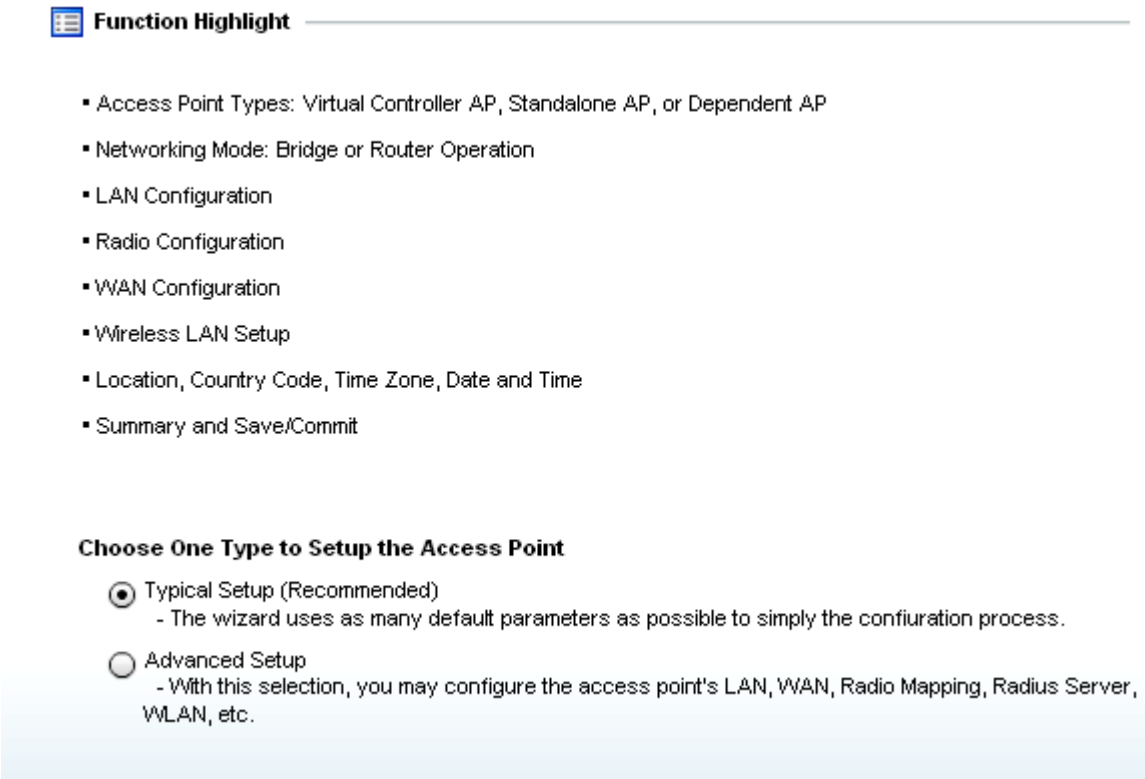

NOTE The Initial Setup Wizard displays the same pages and content for each Access Point model supported. The only difference being the number of radios configurable by model, as an AP7131 model can support up to three radios, AP6522, AP6532, AP6562, AP8132 and AP7161 models support two radios and AP6511 and AP6521 models support a single radio.

The Introduction screen displays the various actions that can be performed using the wizard under the **Function Highlight** field.

Use the **Choose One type to Setup the Access Point** field options to select the type of wizard to run. The **Typical Setup** is the recommended wizard. This wizard uses the default parameters for most of the configuration parameters and sets up a working network with the least amount of manual configuration.

The **Advanced Setup** wizard is for administrators who prefer more control over the different configuration parameters. A few more configuration screens are available for customization when the Advanced Setup wizard is used.

The first page of the *Initial Setup Wizard* displays the **Navigation Panel** and **Function Highlights** for the configuration activities comprising the Access Point's initial setup. This page also displays options to select the typical or advanced mode for the wizard.

The Navigation Panel for the Typical Setup Wizard displays the basic configuration options.

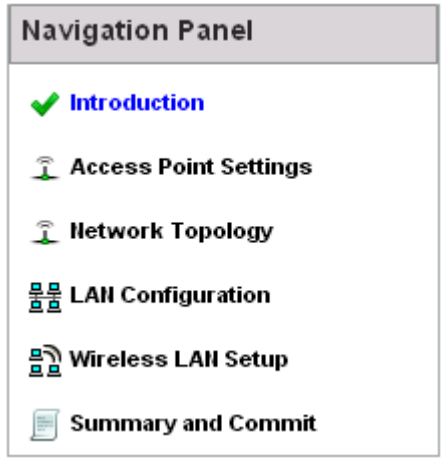

A green checkmark to the left of an item in the **Navigation Panel** defines the task as having its minimum required configuration set correctly. A red X defines a task as still requiring at least one parameter be defined correctly.

7. Select **Save/Commit** within each page to save the updates made to that page's configuration. Select **Next** to proceed to the next page listed in the Navigation Panel without saving your updates.

NOTE While you can navigate to any page in the navigation panel, you cannot complete the Initial AP Setup Wizard until each task in the Navigation Panel has a green checkmark.

For the purposes of this guide, use the **Typical Setup (Recommended)** option to simplify the process of getting the Access Point up and running quickly with a minimum number of changes to the Access Point's default configuration.

For information on using the Access Point's Advanced Setup option, refer to the *WiNG Access Point System Reference Guide* to familiarize yourself with the feature set supported by the WiNG operating system. The guide is available at http://supportcentral.motorolasolutions.com/support/product/manuals.do.

To configure the Access Point using the Typical Setup Wizard:

8. Select **Typical Setup** from the **Choose One type to Setup the Access Point** field on the Initial Setup Wizard.
9. The Typical Setup Wizard displays the **Access Point Settings** screen to define the Access Point's Standalone versus Virtual Controller AP functionality. This screen also enables selection of the country of operation for the Access Point.

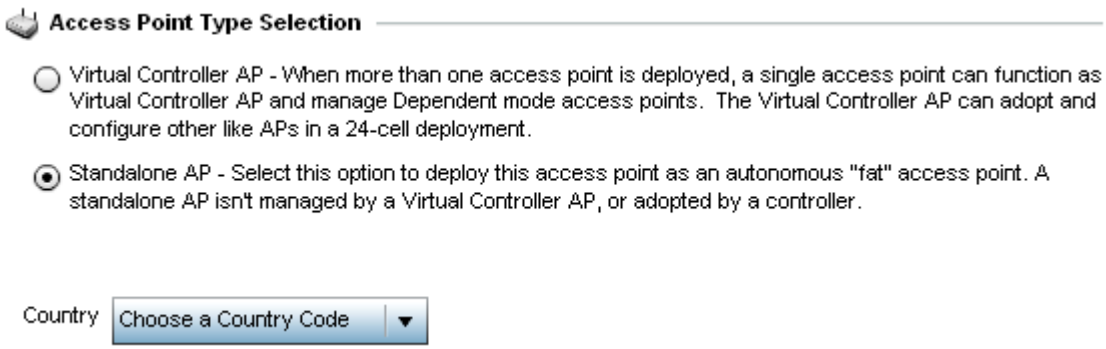

10. Select an **Access Point Type** from the following options:

    - *Virtual Controller AP* - When more than one Access Point is deployed, a single Access Point can function as a Virtual Controller AP. Up to 24 Access Points can be connected to, and managed by, a single Virtual Controller AP of the same Access Point model. These connected Access Points must be the same model as the Virtual Controller AP.

- *Standalone AP* - Select this option to deploy this Access Point as an autonomous fat Access Point. A Standalone AP isn't managed by a Virtual Controller AP, or adopted by a controller.

NOTE If wanting to adopt the Access Point to a controller or service platform, use the controller or service platform's resident UI to connect to the Access Point, provision its configuration and administrate the Access Point's configuration.

NOTE If designating the Access Point as a Standalone AP, Motorola Solutions recommends the Access Point's UI be used exclusively to define its device configuration, and not the CLI. The CLI provides the ability to define more than one profile and the UI does not. Consequently, the two interfaces cannot be used collectively to manage profiles without an administrator encountering problems.

11. Select the **Country Code** of the country where the Access Point is deployed. Selecting a proper country is a critical task while configuring the Access Point, as it defines the correct channels of operation and ensures compliance to the regulations of the selected country. This field is only available for the Typical Setup Wizard.

12. Select **Next** to set the Access Point's network mode.

13. The Typical Setup Wizard displays the **Network Topology** screen to define how the Access Point handles network traffic.

Network Topology

Router Mode - the access point routes traffic between the wireless network and the Internet or corporate network (WAN).

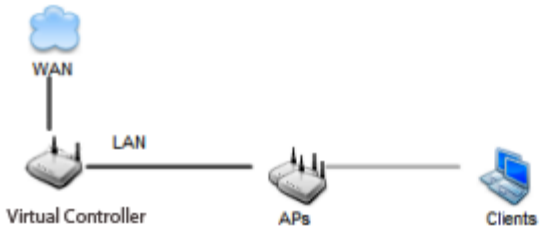

Bridge Mode - In Bridge Mode, the access point depends on an external router for routingLAN and WAN traffic. Routing is generally used on one device, whereas bridging is typically used in a larger density network. Thus, select Bridge Mode when deploying this access point with numerous peer APs supporting clients on both the 2.4 and 5GHz radio bands.

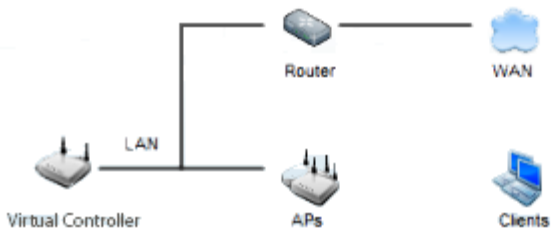

14. Select an Access Point Mode from the available options.
    - *Router Mode* -In Router Mode, the Access Point routes traffic between the local network (LAN) and the Internet or external network (WAN). Router mode is recommended in a deployment supported by just a single Access Point.
    - *Bridge Mode* - In Bridge Mode, the Access Point depends on an external router for routing LAN and WAN traffic. Routing is generally used on one device, whereas bridging is typically used in a larger density network. Select Bridge Mode when deploying this Access Point with numerous peer Access Points supporting clients on both the 2.4GHz and 5GHz radio bands.

NOTE When Bridge Mode is selected, WAN configuration cannot be performed and the Typical Setup Wizard does not display the WAN configuration screen.

15. Select **Next**. The Typical Setup Wizard displays the **LAN Configuration** screen to set the Access Point's LAN interface configuration.

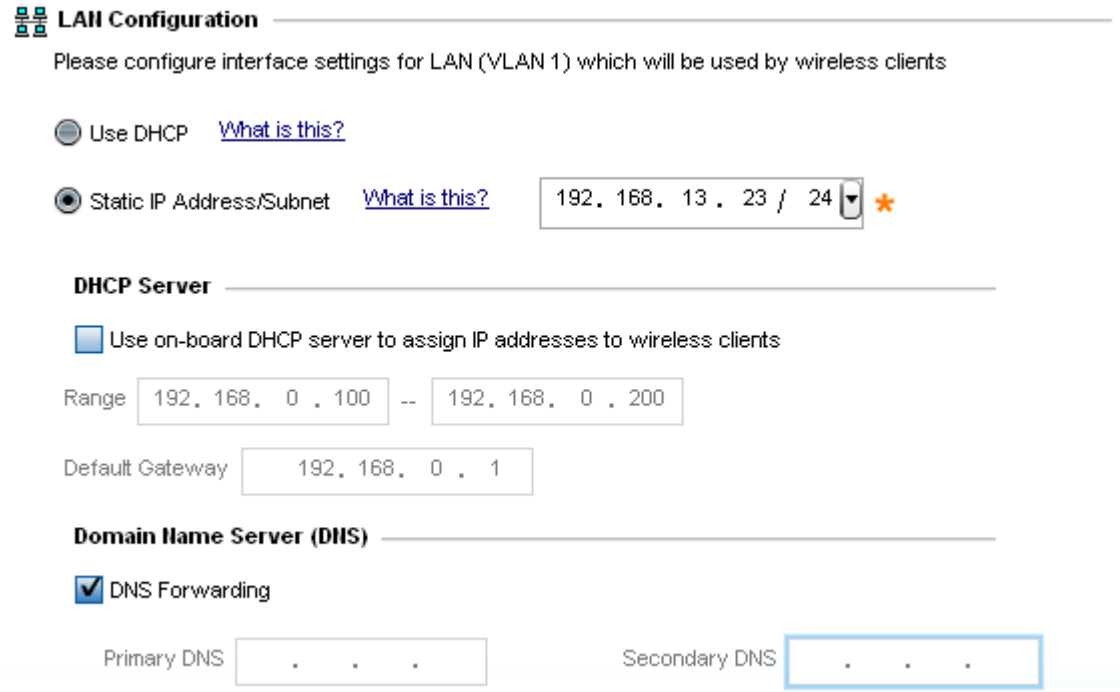

16. Set the following DHCP and Static IP Address/Subnet information for the LAN interface:
    - *Use DHCP* - Select the checkbox to enable an automatic network address configuration using the Access Point's DHCP server.
    - *Static IP Address/Subnet* - Enter an IP Address and a subnet for the Access Point's LAN interface. If *Use DHCP* is selected, this field is not available. When selecting this option, define the following *DHCP Server* and *Domain Name Server (DNS)* resources, as those fields will become enabled on the bottom portion of the screen.
        - *Use on-board DHCP server to assign IP addresses to wireless clients* - Select the checkbox to enable the Access Point's DHCP server to provide IP and DNS information to clients on the LAN interface.
        - *Range* - Enter a starting and ending IP Address range for client assignments on the LAN interface. Avoid assigning IP addresses from x.x.x.1 - x.x.x.10 and x.x.x.255, as they are often reserved for standard network services. This is a required parameter.
        - *Default Gateway* - Define a default gateway address for use with the default gateway. This is a required parameter.

- *DNS Forwarding* - Select this option to allow a DNS server to translate domain names into IP addresses. If this option is not selected, a primary and secondary DNS resource must be specified. DNS forwarding is useful when a request for a domain name is made but the DNS server, responsible for converting the name into its corresponding IP address, cannot locate the matching IP address.
  - *Primary DNS* - Enter an IP Address for the main Domain Name Server providing DNS services for the Access Point's LAN interface.
  - *Secondary DNS* - Enter an IP Address for the backup Domain Name Server providing DNS services for the Access Point's LAN interface.

17. Select **Next.** The Typical Setup Wizard displays the **Wireless LAN Setup** screen to set the Access Point's Wireless LAN interface configuration.

18. Set the following WLAN1 Configuration parameters:
    - *SSID* - Configure the SSID for the WLAN.
    - *WLAN Type* - Configure the encryption and authentication to use with this WLAN.
      - *No Authentication and No Encryption* - Configures a network without any authentication. This option also configures the network without encryption. This means that any data transmitted through the network is in plain text. Any device between end points can see the information transmitted. This is the least secure of all network configurations.
      - *Captive Portal Authentication and No Encryption* - Configures a network that uses a RADIUS server to authenticate users before allowing them on to the network. Once on the network, no encryption is used for the data being transmitted through the network. Select this option to use a Web page (either internally or externally hosted) to authenticate users before access is granted to the network.
      - *PSK authentication, WPA2 encryption* - Configures a network that uses PSK authentication and WPA2 encryption. Select this option to implement a pre-shared key that must be correctly shared between the Access Point and requesting clients using this WLAN.

19. Select **Next**. The Typical Setup Wizard displays the **RADIUS Server Configuration** screen if required.

    Otherwise, the *Typical Setup Wizard* displays the **Summary and Commit** screen.

20. Use the **Radius Server Configuration** screen to configure the users for the onboard RADIUS server. Use the screen to add, modify and remove RADIUS users.

Some WLANs require authentication using the on-board RADIUS server. User accounts must be added for all users that should be authorized by the server.

Username	Description

21. Select **Add User** to display the dialog to enter user information to add to the RADIUS server user database.

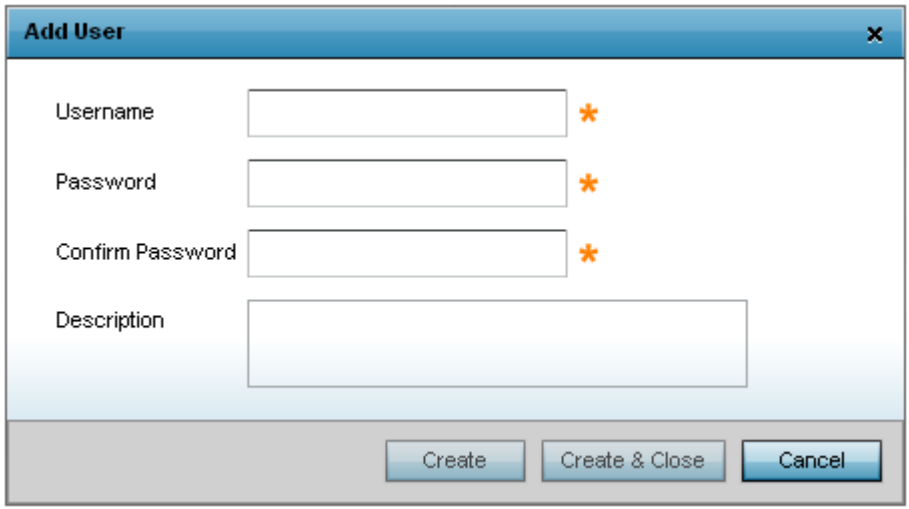

22. Enter the following user information:

- *Username* - Provide a user name used to authenticate the user.
- *Password* - Provide a password used to authenticate the user.
- *Confirm Password* - Confirm the password by entering the same password as entered in the Password field.
- *Description* - Provide a description to identify the user created in the RADIUS server database.

23. To create the entry in the RADIUS server database and add another user, select **Create**. To create the entry in the RADIUS server database and close the Add User dialog, select **Create & Close**.

24. Select **Modify User** on the RADIUS Server Configuration screen to modify information for an existing user from the RADIUS database. Highlight the user entry then select **Modify User**.

NOTE The *Username* cannot be modified with this dialog.

25. Select **Delete User** on the RADIUS Server Configuration screen to remove information for an existing user from the RADIUS database. Highlight the user entry and select **Delete User**.

26. Select **Confirm** on the dialog displayed. The entry for the user is removed from the RADIUS database.

27. To dismiss the dialog without adding, modifying or removing entries in the RADIUS server database, select **Cancel**.

28. Select **Next**. The Typical Setup Wizard displays the **Summary and Commit** screen to summarize the screens (pages) and settings updated using the Typical Setup Wizard.

Access Point Type Page

Access Point Type	Standalone AP

Networking Mode Page

Networking Mode	Router Mode

LAN Configuration Page

LAN Configuration Type	Static IP Address/Subnet
VLAN ID for the LAN Interface	1
Static IP Address/Subnet	192.168.13.23/24

WAN Configuration Page

WAN Configuration Type	Use DHCP
Port to External	GE1 Port

WLAN Configuration

No user intervention or additional settings are required. Its an additional means of validating the Access Point's updated configuration before it's deployed. However, if a screen displays settings not intended as part of the initial configuration, then any screen can be selected again from within the Navigation Panel and its settings modified accordingly.

29. If the configuration displays as intended, select **Save/Commit** to implement these settings to the Access Point's configuration. If additional changes are warranted based on the summary, either select the target page from the **Navigational Panel**, or use the **Back** and **Next** buttons to scroll to the target screen.

4 Specifications

4.1 Electrical Characteristics

An AP-8132 model Access Point has the following electrical characteristics:

Operating Current & Voltage	48VDC, 0.625A (AUX input voltage) 48VDC, 0.75A (PWRS-14000-247R power supply) 802.3at, 25.5W (AP-PSBIAS-2P3-ATR Power Injector)

4.2 Physical Characteristics

An AP-8132 model Access Point has the following physical characteristics:

Dimensions	9 inches x 6.00 inches x 1.75 inches 22.9 cm x 15.2 cm x 4.4 cm
Housing	Metal
Weight (without facade)	3.2 lbs / 1.45 kg
Operating Temperature	32°F to 122°F/0°C to 50°C
Storage Temperature	-40°F to 185°F/-40°C to 85°C
Operating Humidity	5 to 95% Relative Humidity non-condensing
Storage Humidity	85% Relative Humidity non-condensing
Operating Altitude (max)	8,000 ft @ 28C
Storage Altitude (max)	30,000 ft @ 12C
Electrostatic Discharge	+/-15kV Air and +/-8kV Contact @ 50% Relative Humidity

4.3 Radio Characteristics

The AP-8132 model Access Point has the following radio characteristics:

Data Rates Supported	802.11b: 1,2,5.5,11Mbps 802.11g: 1,2,5.5,11,6,9,12,18,24,36,48, and 54Mbps 802.11a: 6,9,12,18,24,36,48, and 54Mbps 802.11n: MCS 0-23 up to 450Mbps
Wireless Medium	*Direct Sequence Spread Spectrum* (DSSS), *Orthogonal Frequency Division Multiplexing* (OFDM) *Spatial multiplexing* (MIMO) *Transmit Beamforming*
Network Standards	802.11a, 802.11b, 802.11g, 802.3, 802.11n
Transmit Power Adjustment	1dB increments

5 Regulatory Information

This device is approved under Motorola Solutions, Inc.

This guide applies to the following Model Numbers: AP-8132.

All Motorola/Symbol devices are designed to be compliant with rules and regulations in locations they are sold and will be labeled as required.

Local language translations are available at the following website: *http://www.motorolasolutions/support*

Any changes or modifications to Motorola/Symbol Technologies equipment, not expressly approved by Motorola/Symbol Technologies, could void the user's authority to operate the equipment.

Motorola/Symbol devices are professionally installed, the Radio Frequency Output Power will not exceed the maximum allowable limit for the country of operation.

Antennas: Use only the supplied or an approved replacement antenna. Unauthorized antennas, modifications, or attachments could cause damage and may violate regulations.

This device is only to be used with a Motorola/Symbol Technologies Wireless Switch.

5.1 Wireless Device Country Approvals

Regulatory markings, subject to certification, are applied to the device signifying the radio(s) is/are approved for use in the following countries: United States, Canada, Japan, China, S. Korea, Australia, and Europe 1

Please refer to the *Declaration of Conformity* (DoC) for details of other country markings. This is available at: *http://www.motorolasolutions.com/doc*

Note: For 2.4GHz or 5GHz Products: Europe includes, Austria, Belgium, Bulgaria, Czech Republic, Cyprus, Denmark, Estonia, Finland, France, Germany, Greece, Hungary, Iceland, Ireland, Italy, Latvia, Liechtenstein, Lithuania, Luxembourg, Malta, Netherlands, Norway, Poland, Portugal, Romania, Slovak Republic, Slovenia, Spain, Sweden, Switzerland and the United Kingdom.

Operation of the device without regulatory approval is illegal.

5.1.1 Country Selection

Select only the country in which you are using the device. Any other selection will make the operation of this device illegal. The US version of Access Point will only have US listed in the country selection table. The US version will be sold /used in the US protectorates: American Samoa, Guam, Puerto Rico, US Virgin Islands.

5.1.2 Frequency of Operation – FCC and IC

You are reminded of the need to observe restrictions on the use of radio devices in fuel depots, chemical plants etc. and areas where the air contains chemicals or particles (such as grain, dust, or metal powders).

2.4 GHz Only

The available channels for 802.11bg operation in the US are Channels 1 to 11. The range of channels is limited by firmware.

5 GHz Only

The use in the UNII (Unlicensed National Information Infrastructure) band 1 (5150-5250 MHz) is restricted to Indoor Use Only; any other use will make the operation of this device illegal.

Industry Canada Statement:

Caution: The device for the band 5150-5250 MHz is only for indoor usage to reduce potential for harmful interference to co-Channel mobile satellite systems. High power radars are allocated as primary users (meaning they have priority) of 5250-5350 MHz and 5650-5850 MHz and these radars could cause interference and/or damage to LE-LAN devices.

Avertissement: Le dispositif fonctionnant dans la bande 5150-5250 MHz est réservé uniquement pour une utilisation à l'intérieur afin de réduire les risques de brouillage préjudiciable aux systèmes de satellites mobiles utilisant les mêmes canaux.

Les utilisateurs de radars de haute puissance sont désignés utilisateurs principaux (c.-à-d., qu'ils ont la priorité) pour les bands 5250-5350 MHz et 5650-5850 MHz et que ces radars pourraient causer du brouillage et/ou des dommages aux dispositifs LAN-EL.

5.2 Health and Safety Recommendations

5.2.1 Warnings for Use of Wireless Devices

Please observe all warning notices with regard to the usage of wireless devices.

5.2.2 Potetially Hazerdous Atmospheres - Fixed Installations

You are reminded of the need to observe restrictions on the use of radio devices in fuel depots, chemical plants etc. and areas where the air contains chemicals or particles (such as grain, dust, or metal powders).

5.2.3 Safety in Hospitals

Wireless devices transmit radio frequency energy and may affect medical electrical equipment. When installed adjacent to other equipment, it is advised to verify that the adjacent equipment is not adversely affected.

Pacemakers

Pacemaker manufacturers recommended that a minimum of 15cm (6 inches) be maintained between a handheld wireless device and a pacemaker to avoid potential interference with the pacemaker. These recommendations are consistent with independent research and recommendations by Wireless Technology Research.

Persons with Pacemakers:

- Should ALWAYS keep the device more than 15cm (6 inches) from their pacemaker when turned ON.
- Should not carry the device in a breast pocket.
- Should use the ear furthest from the pacemaker to minimize the potential for interference.
- If you have any reason to suspect that interference is taking place, turn OFF your device.

Other Medical Devices

Please consult your physician or the manufacturer of the medical device, to determine if the operation of your wireless product may interfere with the medical device.

5.3 RF Exposure Guidelines

5.3.1 Safety Information

Reducing RF Exposure - Use Properly

Only operate the device in accordance with the instructions supplied.

5.4 International

The device complies with internationally recognized standards covering human exposure to electromagnetic fields from radio devices. For information on “International” human exposure to eletromagnetic fields refer to the Motorola/Symbol *Declaration of Conformity* (DoC) at: *http://www.motorolasolutions.com/doc*

5.5 EU

Remote and Standalone Antenna Configurations

To comply with EU RF exposure requirements, antennas that are mounted externally at remote locations or operating near users at stand-alone desktop of similar configurations must operate with a minimum separation distance of 1 meter from all persons.

5.6 US and Canada

Co-located statement

To comply with FCC RF exposure compliance requirements, the antenna used for this transmitter must not be co-located or operating in conjunction with any other transmitter/antenna except those already approved in this filling.

Remote and Standalone Antenna Configurations

To comply with FCC RF exposure requirements, Antennas that are mounted externally must be professionally installed at a fixed location and operate with a minimum distance of 30 cm from all persons.

IC Radiation Exposure Statement:

This equipment complies with IC RSS-102 radiation exposure limits set forth for an uncon-trolled environment. This equipment should be installed and operated with minimum distance 30cm between the radiator & your body.

Déclaration d'exposition aux radiations:

Cet équipement est conforme aux limites d'exposition aux rayonnements IC établies pour un environnement non contrôlé. Cet équipement doit être installé et utilisé avec un minimum de 30 cm de distance entre la source de rayonnement et votre corps.

5.7 Power Supply

This device must be powered from a 802.3af or 802.3at compliant power source which has been certified by the appropriate agencies, or by a LISTED Motorola, Type no. PWRS-14000-247R or AP-PSBIAS-2P3-ATR, direct plug-in power supply, marked Class 2 or LPS (IEC60950-1, SELV). Use of alternative Power Supply will invalidate any approvals given to this unit and may be dangerous.

5.8 Radio Frequency Interference Requirements—FCC

Tested to comply with FCC Standards
FOR HOME OR OFFICE USE

This equipment has been tested and found to comply with the limits for a Class B digital device, pursuant to Part 15 of the FCC rules. These limits are designed to provide reasonable protection against harmful interference in a residential installation. This equipment generates, uses and can radiate radio frequency energy and, if not installed and used in accordance with the instructions, may cause harmful interference to radio communications. However there is no guarantee that interference will not occur in a particular installation. If this equipment does cause harmful interference to radio or television reception, which can be determined by turning the equipment off and on, the user is encouraged to try to correct the interference by one or more of the following measures:

- Reorient or relocate the receiving antenna
- Increase the separation between the equipment and receiver
- Connect the equipment into an outlet on a circuit different from that to which the receiver is connected
- Consult the dealer or an experienced radio/TV technician for help.

5.8.1 Radio Transmitters (Part 15)

This device complies with Part 15 of the FCC Rules. Operation is subject to the following two conditions: (1) this device may not cause harmful interference, and (2) this device must accept any interference received, including interference that may cause undesired operation.

The use of 5 GHz WLAN's, for use in the US, have the following restrictions:

- Notched Band 5.60 - 5.65 GHz

5.9 Radio Frequency Interference Requirements – Canada

This Class B digital apparatus complies with Canadian ICES-003. Cet appareil numérique de la classe B est conforme à la norme NMB-003 du Canada.

5.9.1 Radio Transmitters

For RLAN Devices:

The use of 5 GHz RLAN’s, for use in Canada, have the following restrictions:

- Restricted Band 5.60 – 5.65 GHz

This device complies with RSS 210 of Industry Canada. Operation is subject to the following two conditions: (1) this device may not cause harmful interference and (2) this device must accept any interference received, including interference that may cause undesired operation.

Ce dispositif est conforme à la norme CNR-210 d'Industrie Canada applicable aux appareils radio exempts de licence. Son fonctionnement est sujet aux deux conditions suivantes: (1) le dispositif ne doit pas produire de brouillage préjudiciable, et (2) ce dispositif doit accepter tout brouillage reçu, y compris un brouillage susceptible de provoquer un fonctionnement indésirable.

Label Marking: The Term "IC:" before the radio certification only signifies that Industry Canada technical specifications were met

To reduce potential radio interference to other users, the antenna type and its gain should be so chosen that the equivalent isotropically radiated power (EIRP) is not more than that permitted for successful communication.

The device could automatically discontinue transmission in case of absence of information to trans-mit, or operational failure. Note that this is not intended to prohibit transmission of control or signaling information or the use of repetitive codes where required by the technology.

The maximum antenna gain permitted for devices in the band 5725-5825 MHz shall comply with the e.i.r.p. limits specified for point-to-point and non point-to-point operation as appropriate.

In compliance with respective local regulatory law, Motorola Solutions AP software provides professional installers the option to configure the antenna type and antenna gain for approved antennas.

This radio transmitter (identify the device by certification number, or model number if Category II) has been approved by Industry Canada to operate with the antenna types listed below with the maximum permissible gain and required antenna impedance for each antenna type indicated. Antenna types not included in this list, having a gain greater than the maximum gain indicated for that type, are strictly prohibited for use with this device.

Le présent émetteur radio (identifier le dispositif par son numéro de certification ou son numéro de modèle s'il fait partie du matériel de catégorie I) a été approuvé par Industrie Canada pour fonctionner avec les types d'antenne énumérés ci-dessous et ayant un gain admissible maximal et l'impédance requise pour chaque type d'antenne. Les types d'antenne non inclus dans cette liste, ou dont le gain est supérieur au gain maximal indiqué, sont strictement interdits pour l'exploitation de l'émetteur.

Refer to section 2.8 of this guide for a listing of the 2.4 and 5 GHz antennas initially approved for use with the AP-8132.

5.10 CE Marking and European Economic Area (EEA)

CE

The use of 2.4GHz RLAN's, for use through the EEA, have the following restrictions:

- Maximum radiated transmit power of 100 mW EIRP in the frequency range 2.400 -2.4835 GHz.
- France outside usage, the equipment is restricted to 2.400-2.45 GHz frequency range.
- Italy requires a user license for outside usage.

5.11 Statement of Compliance

Motorola hereby, declares that this device is in compliance with the essential requirements and other relevant provisions of Directive 1999/5/EC. A Declaration of Conformity may be obtained from *http://www.motorolasolutions.com/doc*.

Japan (VCCI) - Voluntary Control Council for Interference

Class B ITE

この装置は、情報処理装置等電波障害自主規制協議会（ＶＣＣＩ）の基準に基づくクラスB情報技術装置です。この装置は、家庭環境で使用することを目的としていますが、この装置がラジオやテレビジョン受信機に近接して使用されると、受信障害を引き起こすことがあります。　取扱説明書に従って正しい取り扱いをして下さい。

Korea Warning Statement for Class B

기 종 별	사 용 자 안 내 문
B급 기기((가정용 방송통신기기)	이 기기는 가정용 (B급) 으로 전자파적합등록을 한 기기로서 주로 가정에서 사용하는 것을 목적으로 하며, 모든 지역에서 사용할 수 있습니다
Class B (Broadcasting Communication Device for Home Use)	This device obtained EMC registration mainly for home use (Class B) and may be used in all areas.

Other Countries

Australia

Use of 5GHz RLAN's in Australia is restricted in the following band 5.50 – 5.65GHz.

Brazil

Declarações Regulamentares para AP-8132 - Brasil

Nota: A marca de certificação se aplica ao Transceptor, modelo AP-8132. Este equipamento opera em caráter secundário, isto é, não tem direito a proteção contra interferência prejudicial, mesmo de estações do mesmo tipo, e não pode causar interferência a sistemas operando em caráter primário. Para maiores informações sobre ANATEL consulte o site: *www.anatel.gov.br*

Chile

Este equipo cumple con la Resolución No 403 de 2008, de la Subsecretaria de telecomunicaciones, relativa a radiaciones electromagnéticas.

China

Mexico

Restrict Frequency Range to: 2.450 – 2.4835 GHz.

S. Korea

당해 무선설비는 운용 중 전파혼신 가능성이 있음

당해 무선설비 는전파혼 신 가능성이 있으므로 인명안전과 관련된 서비스는 할 수 없습니다 .

Taiwan

臺灣

低功率電波輻射性電機管理辦法

第十二條
經型式認證合格之低功率射頻電機，非經許可，公司、商號或使用者均不得擅自變更頻率、加大功率或變更原設計之特性及功能。

第十四條

低功率射頻電機之使用不得影響飛航安全及干擾合法通信;經發現有干擾現象時，應立即停用，並改善至無干擾時方得繼續使用。
前項合法通信，指依電信規定作業之無線電通信。
低功率射頻電機須忍受合法通信或工業、科學及醫療用電波輻射性電機設備之干擾。

在 5.25-5.35 秭赫頻帶內操作之無線資訊傳輸設備，限於室內使用

Thailand

เครื่องโทรคมนาคมและอุปกรณ์นี้ มีความสอดคล้องตามข้อกำหนดของ กทช.

Turkish WEEE Statement of Compliance

EEE Yönetmeliğine Uygundur

5.12 Waste Electrical and Electronic Equipment (WEEE)

English: For EU Customers: All products at the end of their life must be returned to Motorola Solutions for recycling. For information on how to return product, please go to: http://www.motorolasolutions.com/recycling/weee.

Français: Clients de l'Union Européenne: Tous les produits en fin de cycle de vie doivent être retournés à Motorola Solutions pour recyclage. Pour de plus amples informations sur le retour de produits, consultez : http://www.motorolasolutions.com/recycling/weee.

Español: Para clientes en la Unión Europea: todos los productos deberán entregarse a Motorola Solutions al final de su ciclo de vida para que sean reciclados. Si desea más información sobre cómo devolver un producto, visite: http://www.motorolasolutions.com/recycling/weee.

Български: За клиенти от ЕС: След края на полезния им живот всички продукти трябва да се връщат на Motorola Solutions за рециклиране. За информация относно връщането на продукти, моля отидете на адрес: http://www.motorolasolutions.com/recycling/weee.

Deutsch: Für Kunden innerhalb der EU: Alle Produkte müssen am Ende ihrer Lebensdauer zum Recycling an Motorola Solutions zurückgesandt werden. Informationen zur Rücksendung von Produkten finden Sie unter http://www.motorolasolutions.com/recycling/weee.

Italiano: per i clienti dell'UE: tutti i prodotti che sono giunti al termine del rispettivo ciclo di vita devono essere restituiti a Motorola Solutions al fine di consentirne il riciclaggio. Per informazioni sulle modalità di restituzione, visitare il seguente sito Web: http://www.motorolasolutions.com/recycling/weee.

Português: Para clientes da UE: todos os produtos no fim de vida devem ser devolvidos à Motorola Solutions para reciclagem. Para obter informações sobre como devolver o produto, visite: http://www.motorolasolutions.com/recycling/weee.

Nederlands: Voor klanten in de EU: alle producten dienen aan het einde van hun levensduur naar Motorola Solutions te worden teruggezonden voor recycling. Raadpleeg http://www.motorolasolutions.com/recycling/weee voor meer informatie over het terugzenden van producten.

Polski: Klienci z obszaru Unii Europejskiej: Produkty wycofane z eksploatacji nale¿y zwróciæ do firmy Motorola Solutions w celu ich utylizacji. Informacje na temat zwrotu produktów znajduj¹ siê na stronie internetowej http://www.motorolasolutions.com/recycling/weee.

Čeština: Pro zákazníky z EU: Všechny produkty je nutné po skonèení jejich životnosti vrátit spoleènosti Motorola Solutions k recyklaci. Informace o zpùsobu vrácení produktu najdete na webové stránce: http://www.motorolasolutions.com/recycling/weee.

Eesti: EL klientidele: kõik tooted tuleb nende eluea lõppedes tagastada taaskasutamise eesmärgil Motorola Solutions'ile. Lisainformatsiooni saamiseks toote tagastamise kohta külastage palun aadressi: http://www.motorolasolutions.com/recycling/weee.

Magyar: Az EU-ban vásárlóknak: Minden tönkrement terméket a Motorola Solutions vállalathoz kell eljuttatni újrahasznosítás céljából. A termék visszajuttatásának módjával kapcsolatos tudnivalókért látogasson el a http://www.motorolasolutions.com/recycling/weee weboldalra.

Svenska: För kunder inom EU: Alla produkter som uppnått sin livslängd måste returneras till Motorola Solutions för återvinning. Information om hur du returnerar produkten finns på http://www.motorolasolutions.com/recycling/weee.

Suomi: Asiakkaat Euroopan unionin alueella: Kaikki tuotteet on palautettava kierrätettäväksi Motorola Solutions-yhtiöön, kun tuotetta ei enää käytetä. Lisätietoja tuotteen palauttamisesta on osoitteessa http://www.motorolasolutions.com/recycling/weee.

Dansk: Til kunder i EU: Alle produkter skal returneres til Motorola Solutions til recirkulering, når de er udtjent. Læs oplysningerne om returnering af produkter på: http://www.motorolasolutions.com/recycling/weee.

Ελληνικά: Για πελάτες στην Ε.Ε.: Όλα τα προϊόντα, στο τέλος της διάρκειας ζωής τους, πρέπει να επιστρέφονται στην Motorola Solutions για ανακύκλωση. Για περισσότερες πληροφορίες σχετικά με την επιστροφή ενός προϊόντος, επισκεφθείτε τη διεύθυνση http://www.motorolasolutions.com/recycling/weee στο Διαδίκτυο.

Malti: Għal klijenti fl-UE: il-prodotti kollha li jkunu waslu fl-aħħar tal-ħajja ta' l-użu tagħhom, iridu jiġu rritornati għand Motorola Solutions għar-riċiklaġġ. Għal aktar tagħrif dwar kif għandek tirritorna l-prodott, jekk jogħġbok żur: http://www.motorolasolutions.com/recycling/weee.

Românesc: Pentru clienţii din UE: Toate produsele, la sfârşitul duratei lor de funcţionare, trebuie returnate la Motorola Solutions pentru reciclare. Pentru informaţii despre returnarea produsului, accesaţi: http://www.motorolasolutions.com/recycling/weee.

Slovenski: Za kupce v EU: vsi izdelki se morajo po poteku življenjske dobe vrniti podjetju Motorola Solutions za reciklažo. Za informacije o vračilu izdelka obiščite: http://www.motorolasolutions.com/recycling/weee.

Slovenčina: Pre zákazníkov z krajín EU: Všetky výrobky musia byť po uplynutí doby ich životnosti vrátené spoločnosti Motorola Solutions na recykláciu. Bližšie informácie o vrátení výrobkov nájdete na: http://www.motorolasolutions.com/recycling/weee.

Lietuvių: ES vartotojams: visi gaminiai, pasibaigus jų eksploatacijos laikui, turi būti grąžinti utilizuoti į kompaniją „Motorola Solutions“. Daugiau informacijos, kaip grąžinti gaminį, rasite: http://www.motorolasolutions.com/recycling/weee.

Latviešu: ES klientiem: visi produkti pēc to kalpošanas mūža beigām ir jānogādā atpakaļ Motorola Solutions otrreizējai pārstrādei. Lai iegūtu informāciju par produktu nogādāšanu Motorola, lūdzu, skatiet: http://www.motorolasolutions.com/recycling/weee.**Türkçe:** AB Müşterileri için: Kullanım süresi dolan tüm ürünler geri dönüştürme için Motorola Solutions'ya iade edilmelidir. Ürünlerin nasıl iade edileceği hakkında bilgi için lütfen şu adresi ziyaret edin: http://www.motorolasolutions.com/recycling/weee.

5.13 TURKISH WEEE Statement of Compliance

EEE Yönetmeliğine Uygundur

6 Motorola Solutions Support Center

If you have a problem with your equipment, contact support for your region.

Contact information is available at: *http://motorolasolutions.com/support*.

When contacting Motorola Solutions support, please provide the following information:

- Serial number of the unit
- Model number or product name
- Software type and version number

Motorola Solutions responds to calls by e-mail, telephone, or fax within the time limits set forth in support agreements. If you purchased your product from a Motorola Solutions business partner, contact that business partner for support.

Customer Support Web Sites

The Motorola Solutions Support Central Web site, located at *http://motorolasolutions.com/support*.

provides information and online assistance including developer tools, software downloads, product manuals and online repair requests.

Manuals

http://supportcentral.motorolasolutions.com/support

General Information

Obtain additional information by contacting Motorola Solutions at:

Telephone (North America): 1-800-722-6234

Telephone (International): +1-631-738-5200

Website: *http://motorolasolutions.com*

7 AP-8132 Access Point China ROHS Compliance

部件名称 (Parts)	有毒有害物质或元素					
	铅 (Pb)	汞 (Hg)	镉 (Cd)	六价铬 (Cr^{6+})	多溴联苯 (PBB)	多溴二苯醚 (PBDE)
金属部件 (Metal Parts)	X	O	O	O	O	O
电路模块 (Circuit Modules)	X	O	O	O	O	O
电缆及电缆组件 (Cables and Cable Assemblies)	X	O	O	O	O	O
塑料和聚合物部件 (Plastic and Polymeric Parts)	O	O	O	O	O	O
光学和光学组件 (Optics and Optical Components)	O	O	O	O	O	O
电池 (Batteries)	O	O	O	O	O	O

O：表示该有毒有害物质在该部件所有均质材料中的含量均在 SJ/T11363-2006 标准规定的限量要求以下。

X：表示该有毒有害物质至少在该部件的某一均质材料中的含量超出 SJ/T11363-2006 标准规定的限量要求。

对销售之日的所售产品，本表表示，公司供应链的电子信息产品可能包含这些物质。注意：在所售产品中可能会也可能不会含有所有所列的部件。

This table was created to comply with China RoHS requirements for Motorola Solutions' AP-8132 Access Point.

Motorola Solutions, Inc.
1301 E. Algonquin Rd.
Schaumburg, IL 60196-1078, U.S.A.
http://www.motorolasolutions.com

MN000042A01
Revision A September 2013